AP 430 2/E

PURCHASE CODES

AP 430 2/E three-phase	3RAP432.1

SPARE PARTS

Cooling element	3RNAP432E
Frame	1432CNV
Adjustable thermo-switch	1TRM0-90
Shock isolating mounting (4 pcs)	3KIT4511
Electric Fan for 3RAP432.1	1VNELCO43238DV1
Electric junction box for 3RAP432.1	1CSSDSAREL

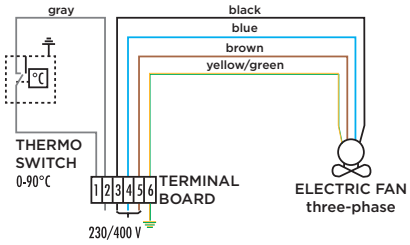

PERFOMANCE DIAGRAM

kr [kcal/h°C]	kW [kW/°C]
500	
475	0,55
450	
425	0,5
400	
375	0,45
350	0,4
325/0	l/min

30 60 90 120 150 180 210

PRESSURE DROP DIAGRAM

Bar	
1,75	
1,5	
1,25	
1	
0,75	
0,5	
0,25	
0	l/min

30 60 92 120 150 180 210

CORRECTION FACTOR

cSt	22	30	46	68	100	150	220
f	0,6	1	1,5	2,3	3,5	5	7

- Dimensions and technical characteristics are not binding

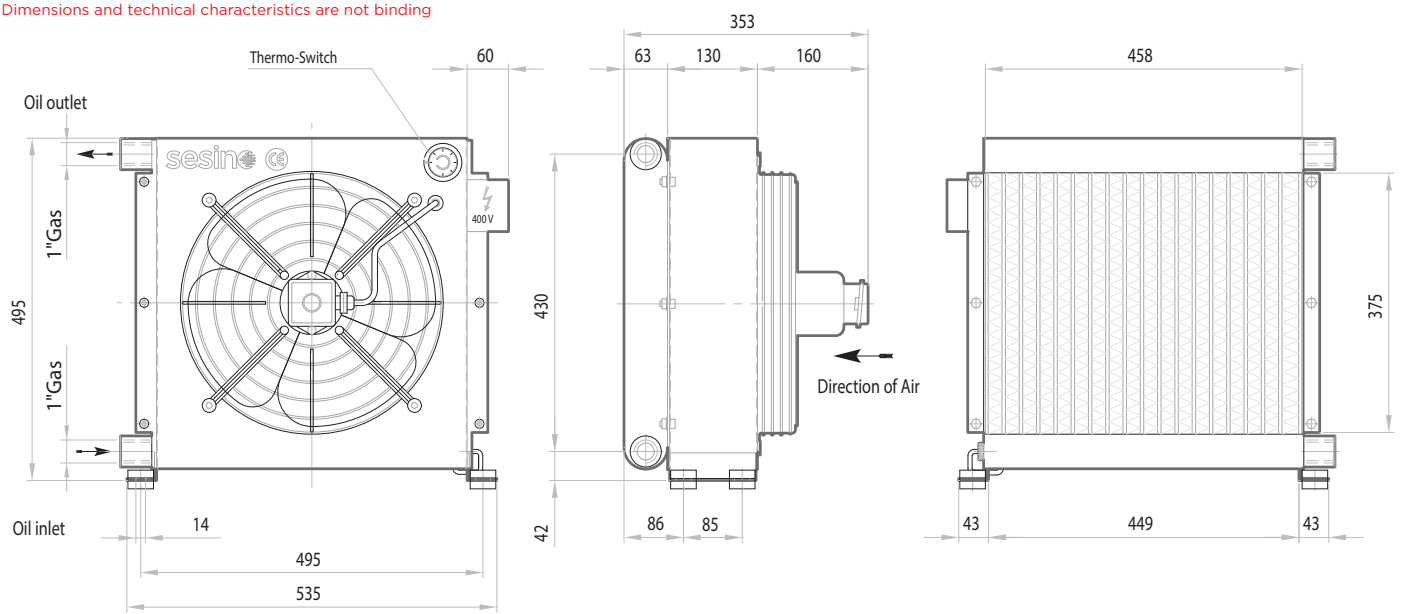

OIL FLOW	CAPACITY	VOLTAGE	FREQUENCY	POWER	CURRENT	AIR FLOW	PROTECTION	NOISE LEVEL	WEIGHT	ø FAN
l/min	l	V	hz	W	A	m³/h	IP	dB(A)	kg	mm
30-180	5,5	Δ 230 Y 400	50	110/180	0,57/0,33	2.700	55	72	24	400
30-180	5,5	Δ 265 Y 460	60	145/260	0,68/0,39	3.500	55	72	24	400

Gik Impianti Srl - Via Fossetta 12/A - 35020 - Terrassa Padovana (PD) - Italy
Tel: +39 049 5352484 - Fax: +39 049 8252584 - info@gikimpianti.it - www.gikimpianti.it

AP 260 E

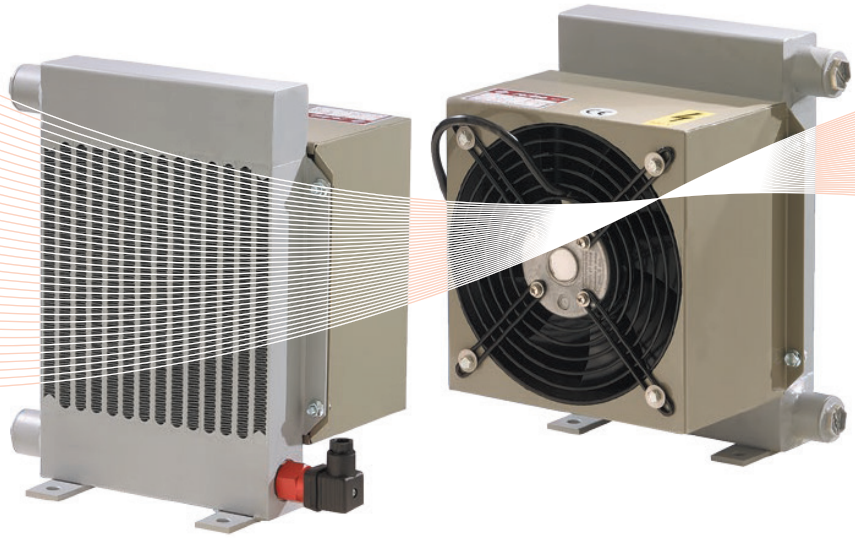

PURCHASE CODES

AP 260 E single-phase	3RAP260T1
AP 260 E three-phase	3RAP26038T1

SPARE PARTS

Cooling element	3RNAP260
Thermo-switch 55-42 IP54	1TRM55-42
Frame	3CNAP260CA.1
Electric Fan for 3RAP260T1	1VNA2E200.1
Electric Fan for 3RAP26038T1	1VNA2D200

PERFOMANCE DIAGRAM

kr [kcal/h°C]	kW [kW/°C]
120	0,14
118	
116	0,135
114	
112	0,0325
110	
108	0,13
106	
104	0,125
102	
100	0,12
98/0	l/min

5 15 25 35 45 55 65

PRESSURE DROP DIAGRAM

Bar	
1,2	
1	
0,8	
0,6	
0,4	
0,2	
0	l/min

5 15 25 35 45 55 65

CORRECTION FACTOR

cSt	22	30	46	68	100	150	220
f	0,6	1	1,5	2,3	3,5	5	7

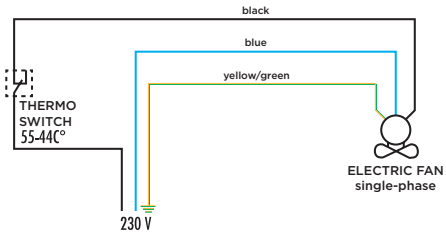

- Dimensions and technical characteristics are not binding

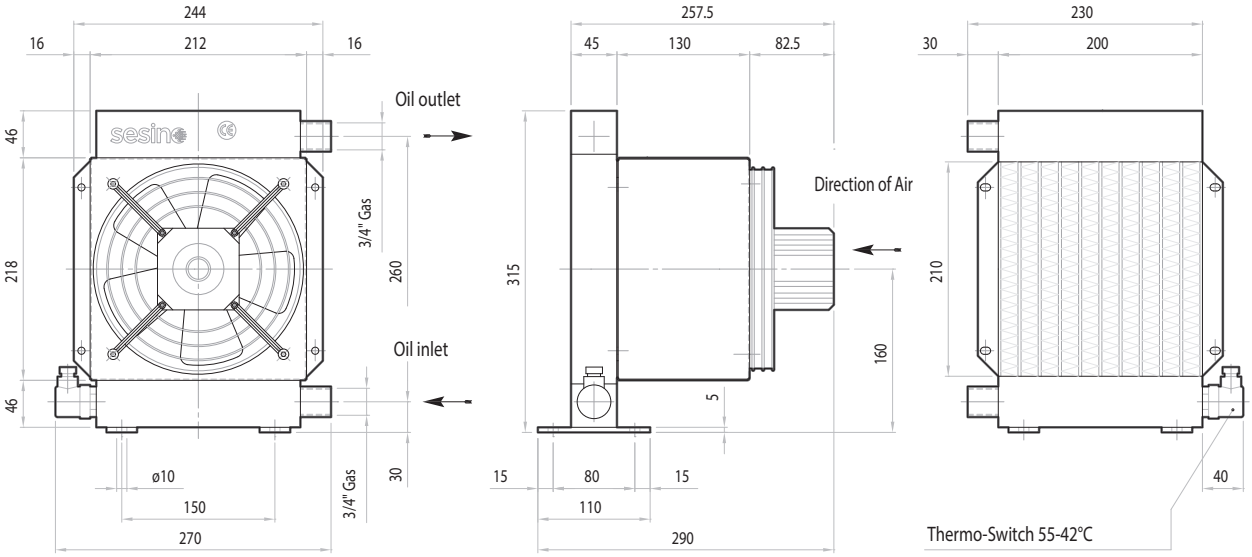

OIL FLOW	CAPACITY	VOLTAGE	FREQUENCY	POWER	CURRENT	AIR FLOW	PROTECTION	NOISE LEVEL	WEIGHT	ø FAN
l/min	l	V	hz	W	A	m³/h	IP	dB(A)	kg	mm
50-60	1,2	230/240	50/60	18/62	0,27	630	54	55	6	200
50-60	1,2	400	50/60	68/70	0,17/0,13	630	54	55	6	200

Gik Impianti Srl - Via Fossetta 12/A - 35020 - Terrassa Padovana (PD) - Italy
Tel: +39 049 5352484 - Fax: +39 049 8252584 - info@gikimpianti.it - www.gikimpianti.it

AP 178 E

PURCHASE CODES

AP 178 E single-phase	3RAP178

SPARE PARTS

Cooling element	1RO92302
Fan grill	1GPR178
Frame	3CN178.1
Housing	3TL178.1
Electric Fan for 3RAP178	1VNAP178230

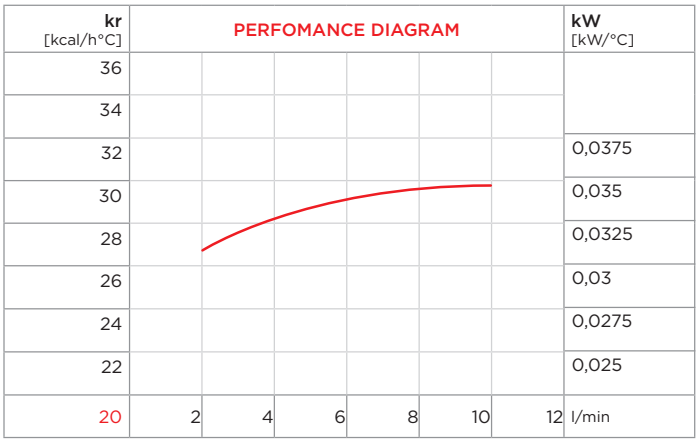

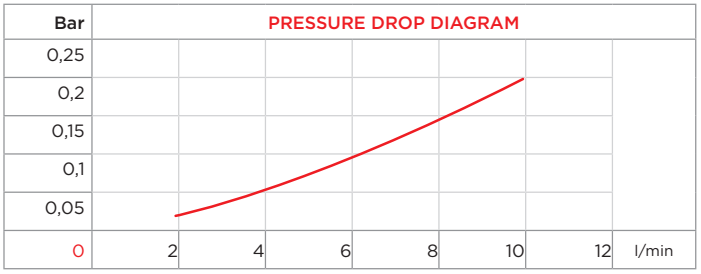

CORRECTION FACTOR							
cSt	22	30	46	68	100	150	220
f	0,6	1	1,5	2,3	3,5	5	7

- Dimensions and technical characteristics are not binding

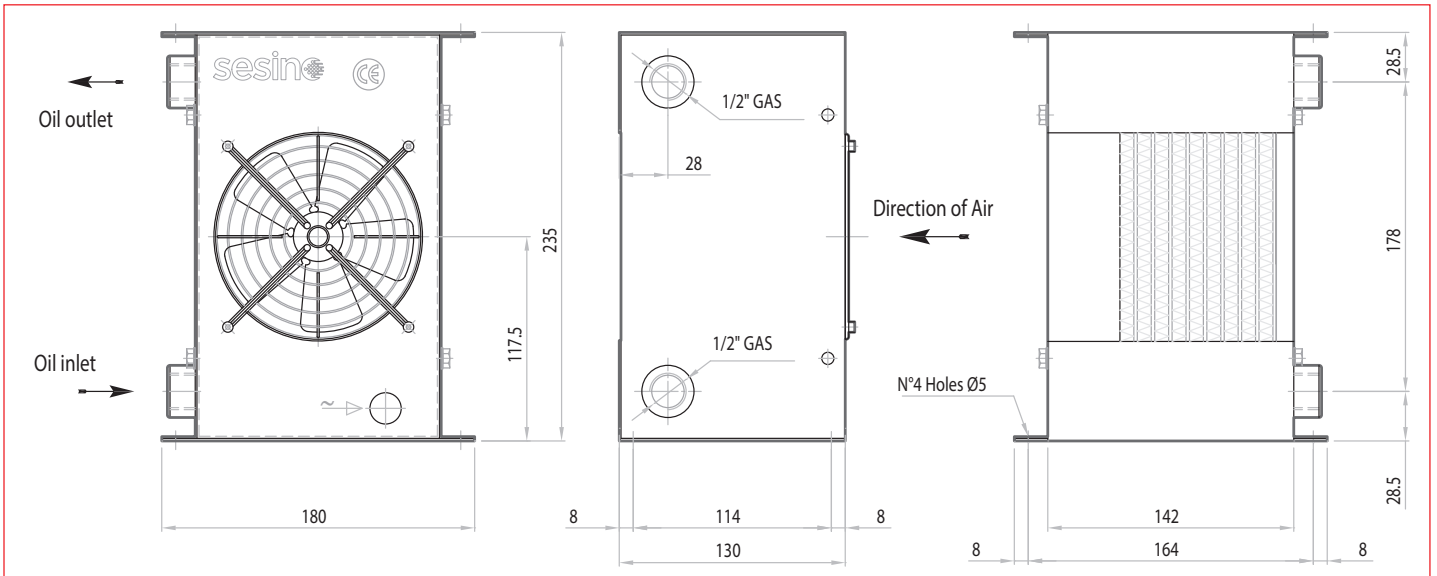

OIL FLOW	CAPACITY	VOLTAGE	FREQUENCY	POWER	CURRENT	AIR FLOW	PROTECTION	NOISE LEVEL	WEIGHT	ø FAN
l/min	l	V	hz	W	A	m³/h	IP	dB(A)	kg	mm
1-10	0,5	230	50/60	19/18	1,2/1,1	125	54	55	4	125

Gik Impianti Srl - Via Fossetta 12/A - 35020 - Terrassa Padovana (PD) - Italy
Tel: +39 049 5352484 - Fax: +39 049 8252584 - info@gikimpianti.it - www.gikimpianti.it

AP 300/2 E

PURCHASE CODES

AP 300/2 E single-phase	3RAP302
AP 300/2 E three-phase	3RAP30238

SPARE PARTS

Cooling element	3RNAP302
Frame	3CNAP302
Housing	1302TLV
Adjustable thermo-switch	1TRM0-90
Electric fan for 3RAP302	1VNA2E250G
Electric fan for 3RAP30238	1VNA2D250.2
Electric junction box for 3RAP30038	1CSSDSAREL

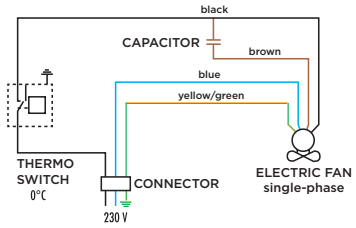

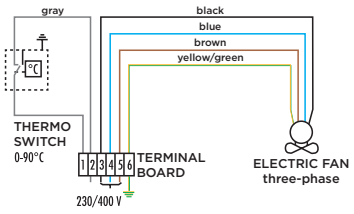

kr [kcal/h°C]	PERFOMANCE DIAGRAM	kW [kW/°C]
230		0,26
220		0,25
210		0,24
200		0,23
190		0,22
180		0,21
170		0,2
160/0	20 40 60 80 100 120 140 160 180	l/min

Bar	PRESSURE DROP DIAGRAM
0,9	
0,75	
0,6	
0,45	
0,3	
0,15	
0	20 40 60 80 100 120 140 160 180 l/min

CORRECTION FACTOR							
cSt	22	30	46	68	100	150	220
f	0,6	1	1,5	2,3	3,5	5	7

- Dimensions and technical characteristics are not binding

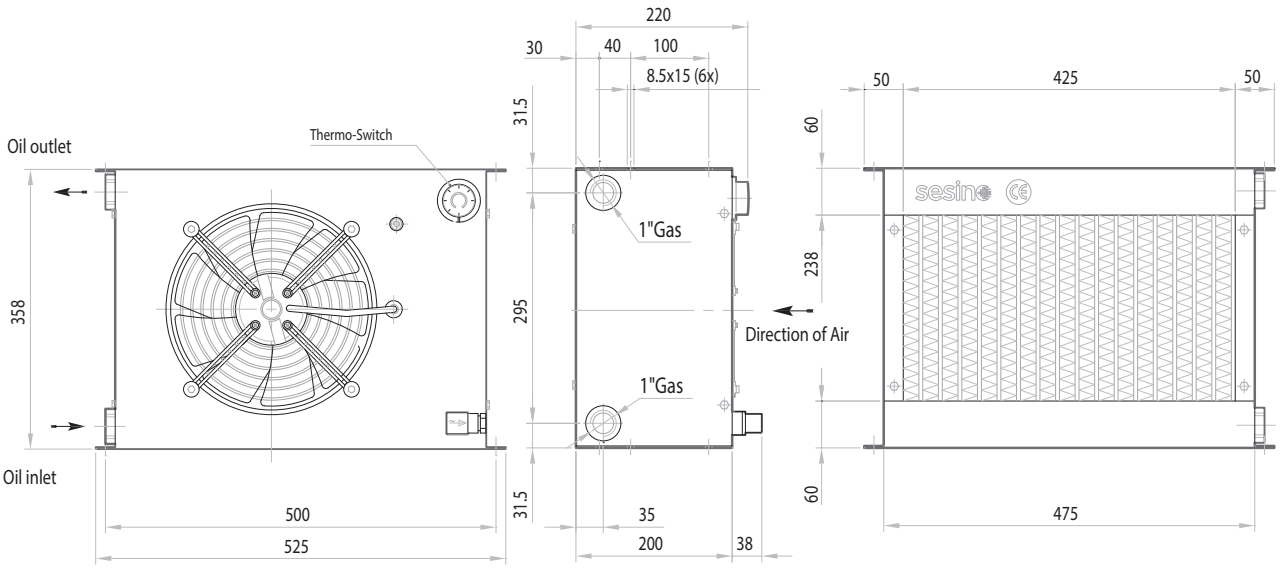

OIL FLOW	CAPACITY	VOLTAGE	FREQUENCY	POWER	CURRENT	AIR FLOW	PROTECTION	NOISE LEVEL	WEIGHT	ø FAN
l/min	l	V	hz	W	A	m³/h	IP	dB(A)	kg	mm
20-160	3,6	230	50/60	115/150	0,51/0,66	1.300	54	75	17	250
20-160	3,6	400	50/60	0,20/0,23	100/140	1.300	54	73	12	250

Gik Impianti Srl - Via Fossetta 12/A - 35020 - Terrassa Padovana (PD) - Italy
Tel: +39 049 5352484 - Fax: +39 049 8252584 - info@gikimpianti.it - www.gikimpianti.it

AP 2/730 EB

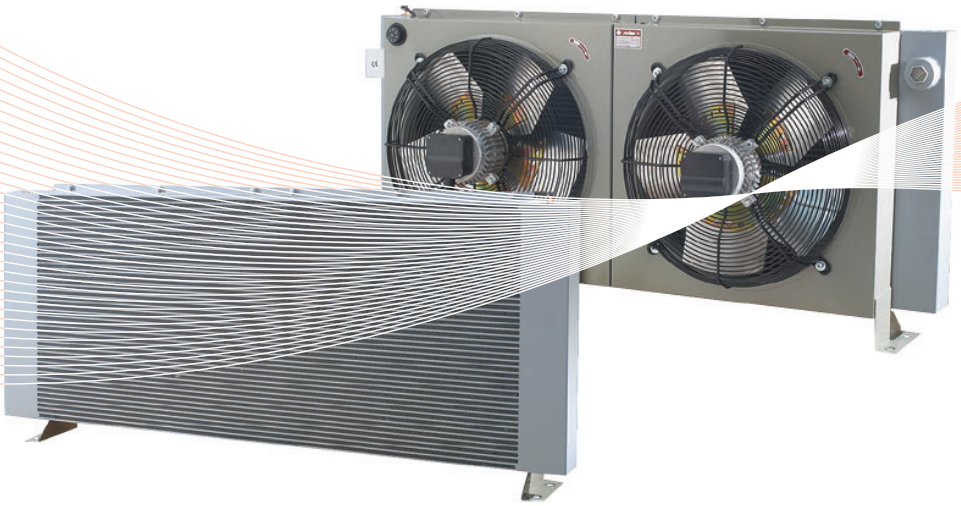

PURCHASE CODES

AP 2/730 EB three-phase	**3RAP2/730EB**

SPARE PARTS

Thermo-switch	1TRM0-90
Shock isolating mounting (4 pcs)	3KIT4232
Electric junction box	1CSSDSAREL
Cooling element	1RO02357
Electric fan	1VNA4D500DV
Frame	3CNAP2/730EB.1

PERFOMANCE DIAGRAM

kr [kcal/h°C]	kW [kW/°C]
2750	
2650	
2550	3
2450	
2350	2,75
2250	
2150	2,5
2050	
1950	2,25
1850/0	l/min

50 100 150 200 250 300 350 400

PRESSURE DROP DIAGRAM

Bar	
3,5	
3	
2,5	
2	
1,5	
1	
0,50	
0	l/min

50 100 150 200 250 300 350 400

CORRECTION FACTOR

cSt	22	30	46	68	100	150	220
f	0,6	1	1,5	2,3	3,5	5	7

- Dimensions and technical characteristics are not binding

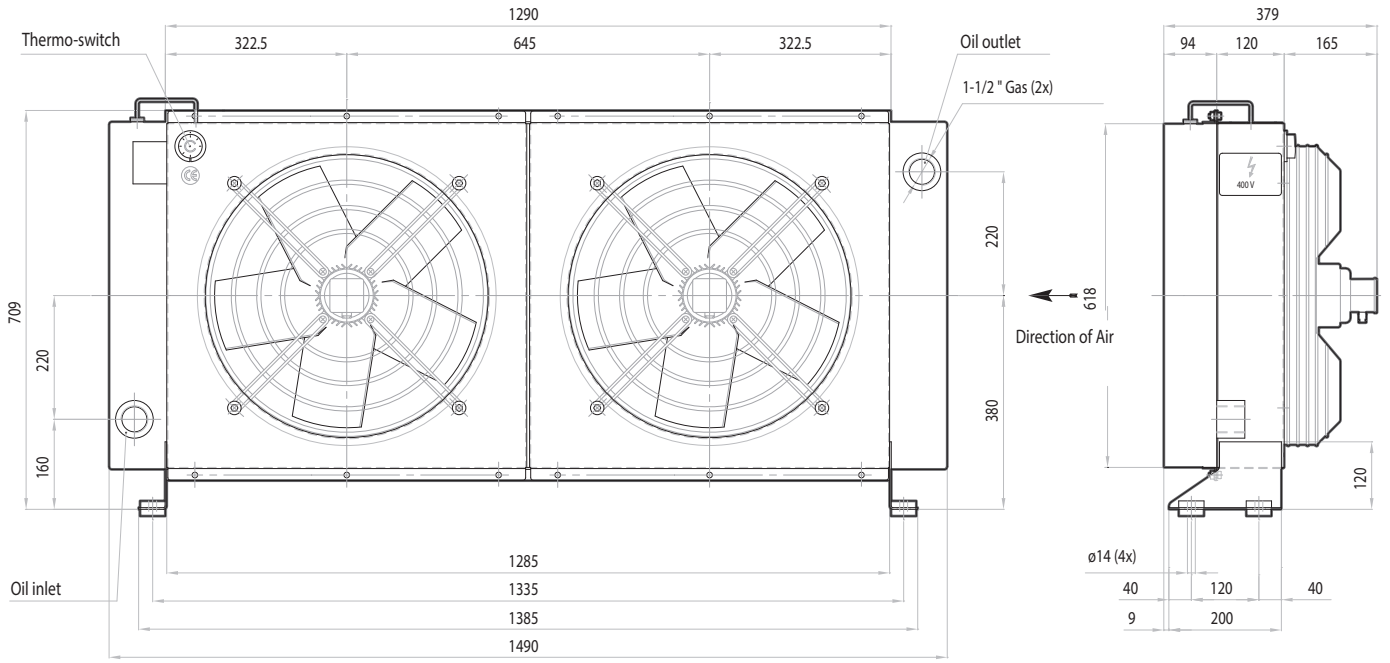

OIL FLOW	CAPACITY	VOLTAGE	FREQUENCY	POWER	CURRENT	AIR FLOW	PROTECTION	NOISE LEVEL	WEIGHT	ø FAN
l/min	l	V	hz	W	A	m³/h	IP	dB(A)	kg	mm
100-350	30	230/400	50	2x 690	2x 2,34	2x 6.300	54	75	140	500
100-350	30	277/480	60	2x 1050	2x 2,72	2x 8.800	54	77	140	500

Gik Impianti Srl - Via Fossetta 12/A - 35020 - Terrassa Padovana (PD) - Italy
Tel: +39 049 5352484 - Fax: +39 049 8252584 - info@gikimpianti.it - www.gikimpianti.it

AP 830 EB

PURCHASE CODES

AP 830 EB three-phase	**3RAP830EB**

SPARE PARTS

Adjustable thermo-switch	1TRM0-90
Shock isolating mounting (4 pcs)	3KIT4232
Electric junction box	1CSSDSAREL
Cooling element	3RNAP830E
Electric fan	1VNA4D560DV
Frame	3CNAP830EB.1

PERFOMANCE DIAGRAM

kr [kcal/h°C]	kW [kW/°C]
2000	
1925	2,2
1850	2,1
1775	2
1700	1,9
1625	1,8
1550	1,7
1475	

140/100	150	200	250	300	350	400	450	l/min

PRESSURE DROP DIAGRAM

Bar
2,25
2
1,75
1,5
1,25
1
0,75
0,5
0,25

0/100	150	200	250	300	350	400	450	l/min

CORRECTION FACTOR

cSt	22	30	46	68	100	150	220
f	0,6	1	1,5	2,3	3,5	5	7

- Dimensions and technical characteristics are not binding

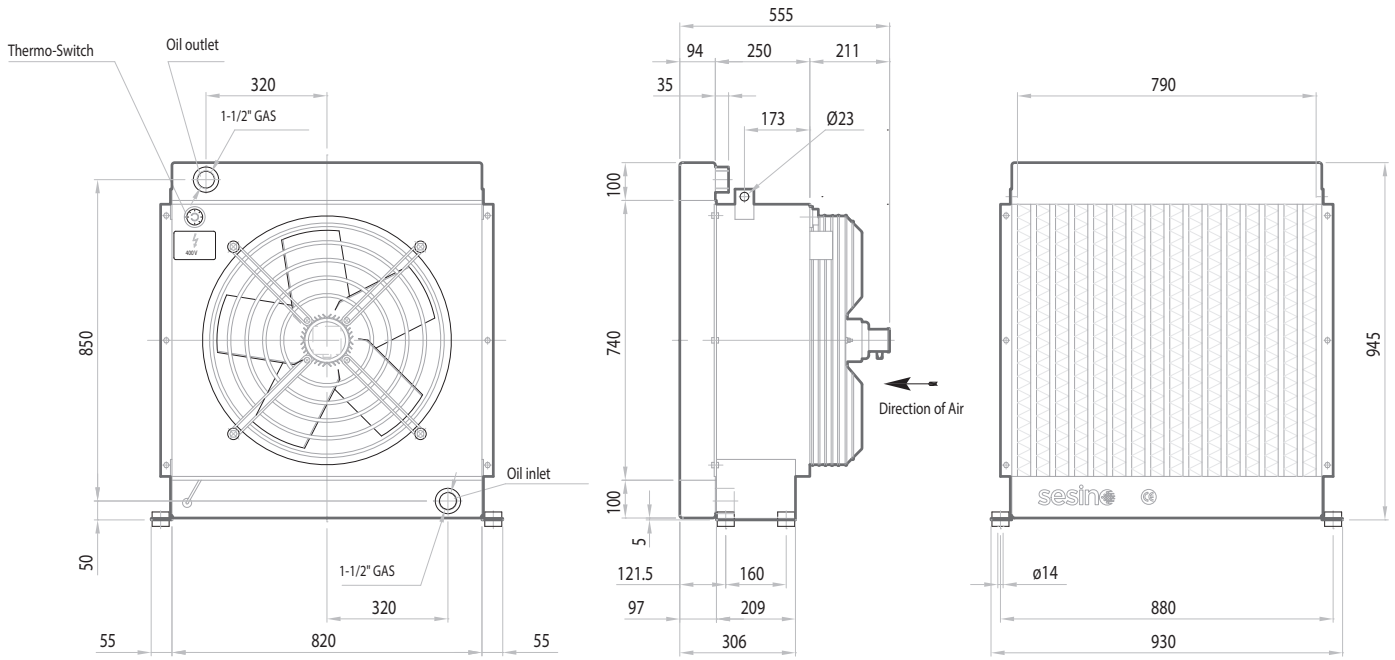

OIL FLOW	CAPACITY	VOLTAGE	FREQUENCY	POWER	CURRENT	AIR FLOW	PROTECTION	NOISE LEVEL	WEIGHT	ø FAN
l/min	l	V	hz	W	A	m³/h	IP	dB(A)	kg	mm
150-400	20	400	50	810	1,54	9.500	54	73	83	560
150-400	20	480	60	1300	1,94	11.500	54	75	83	560

Gik Impianti Srl - Via Fossetta 12/A - 35020 - Terrassa Padovana (PD) - Italy
Tel: +39 049 5352484 - Fax: +39 049 8252584 - info@gikimpianti.it - www.gikimpianti.it

AP 680 EB

PURCHASE CODES

AP 680 EB three-phase	**3RAP680EB**

SPARE PARTS

Adjustable thermo-switch	1TRM0-90
Shock isolating mounting (4 pcs)	3KIT4135
Electric junction box	1CSSDSAREL
Cooling element	3RNAP680E
Electric fan	1VNA4D500DV
Frame	3CNAP680EB.1

PERFOMANCE DIAGRAM

kr [kcal/ h°C]	kW [kW/°C]
950	1,1
925	
900	1,05
875	1
850	
825	0,95
775	0,9
750	

725/75	100	125	150	175	200	225	250	275	300	325	l/min

PRESSURE DROP DIAGRAM

Bar
2
1,75
1,5
1,25
1
0,75
0,5
0,25

0/75	100	125	150	175	200	225	250	275	300	325	l/min

CORRECTION FACTOR

cSt	22	30	46	68	100	150	220
f	0,6	1	1,5	2,3	3,5	5	7

Dimensions and technical characteristics are not binding

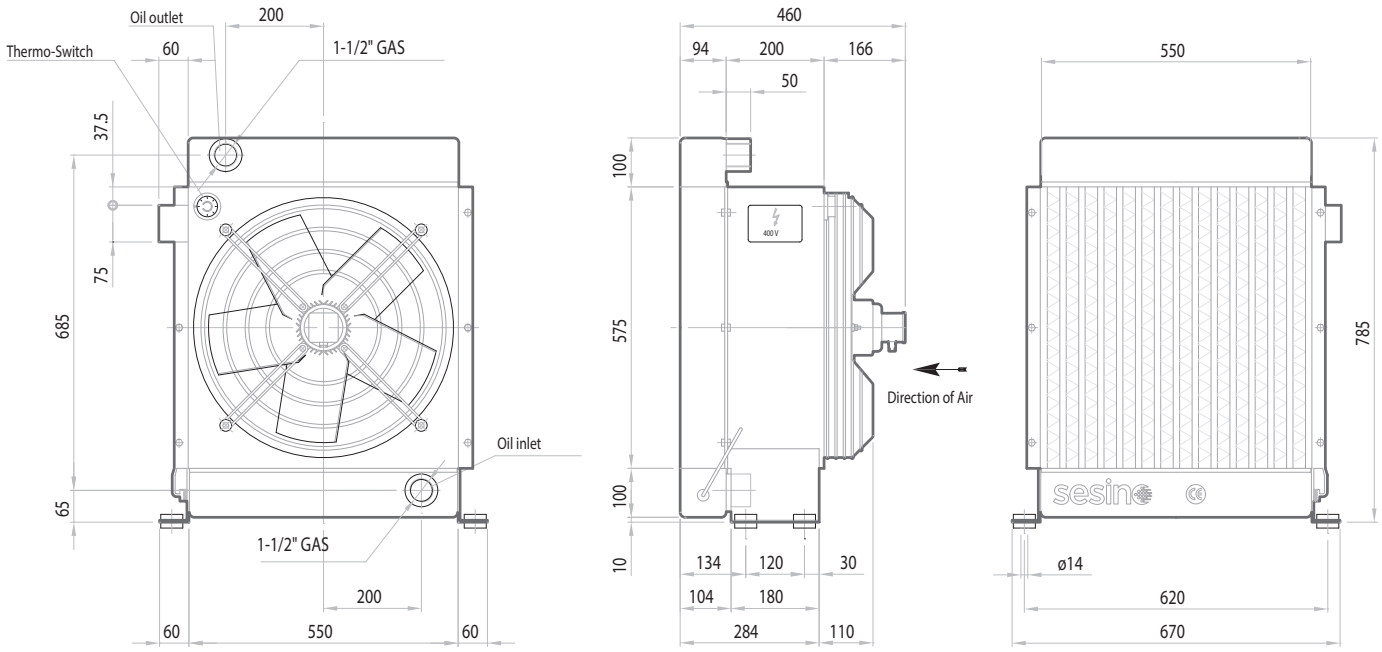

OIL FLOW	CAPACITY	VOLTAGE	FREQUENCY	POWER	CURRENT	AIR FLOW	PROTECTION	NOISE LEVEL	WEIGHT	ø FAN
l/min	l	V	hz	W	A	m³/h	IP	dB(A)	kg	mm
100-300	15	230/400	50	690	2,34	6.300	54	72	62	500
100-300	15	277/480	60	1050	2,72	8.800	54	75	62	500

Gik Impianti Srl - Via Fossetta 12/A - 35020 - Terrassa Padovana (PD) - Italy
Tel: +39 049 5352484 - Fax: +39 049 8252584 - info@gikimpianti.it - www.gikimpianti.it

AP 580 EB

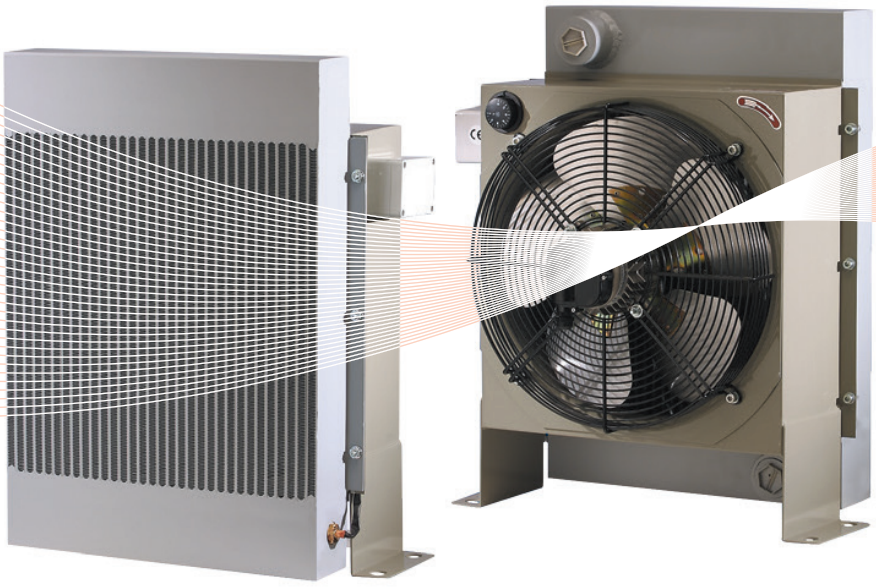

PURCHASE CODES

AP 580 EB three-phase	**3RAP580EB**

SPARE PARTS

Adjustable thermo-switch	1TRM0-90
Shock isolating mounting (4 pcs)	3KIT4135
Electric junction box	1CSSDSAREL
Cooling element	3RNAP580E
Electric fan	1VNELCO43238DV1
Frame	3CNAP580EB.1

PERFOMANCE DIAGRAM

kr [kcal/h°C]	kW [kW/°C]
650	0,75
625	
600	0,7
575	
550	0,65
525	0,6
500	

475/75	100	125	150	175	200	225	250	275	l/min

PRESSURE DROP DIAGRAM

Bar									
2									
1,75									
1,5									
1,25									
1									
0,75									
0,5									
0,25									
0/75	100	125	150	175	200	225	250	275	l/min

CORRECTION FACTOR

cSt	22	30	46	68	100	150	220
f	0,6	1	1,5	2,3	3,5	5	7

- Dimensions and technical characteristics are not binding

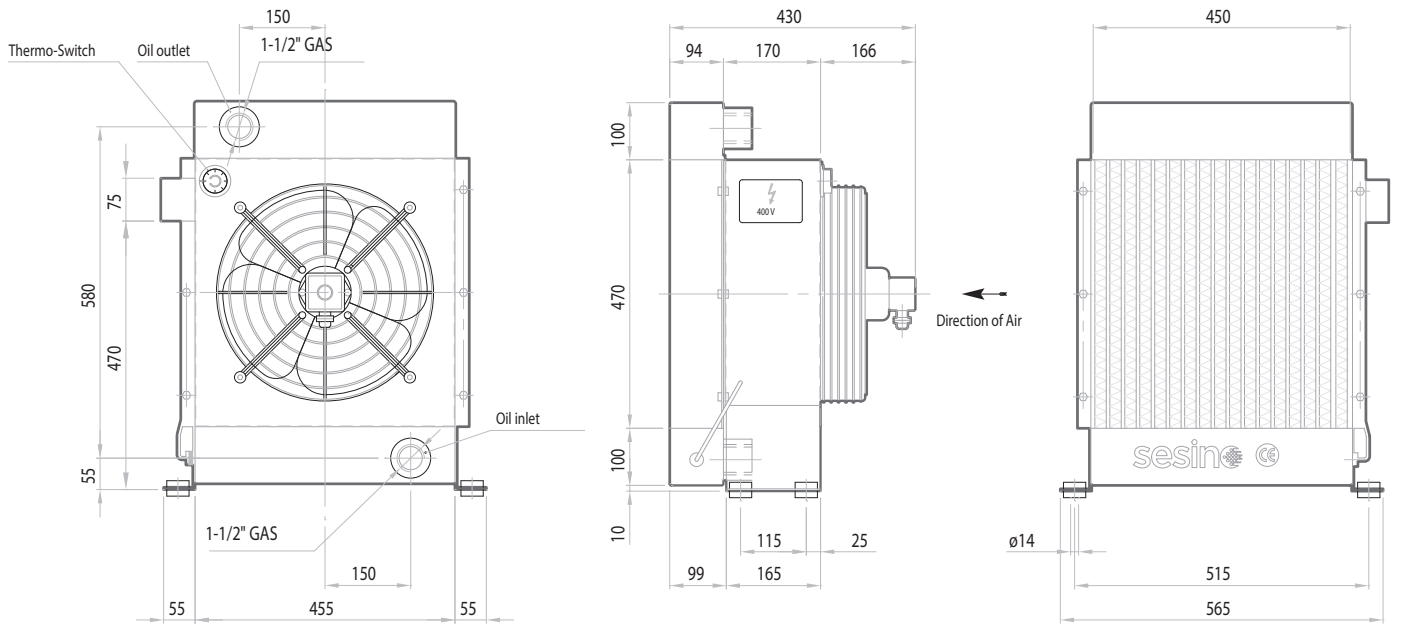

OIL FLOW	CAPACITY	VOLTAGE	FREQUENCY	POWER	CURRENT	AIR FLOW	PROTECTION	NOISE LEVEL	WEIGHT	ø FAN
l/min	l	V	hz	W	A	m³/h	IP	dB(A)	kg	mm
100-250	11,5	Δ 230 Y 400	50	110/180	0,57/0,33	3.500	55	72	40	400
100-250	11,5	Δ 265 Y 460	60	145/260	0,68/0,39	4.800	55	72	40	400

Gik Impianti Srl - Via Fossetta 12/A - 35020 - Terrassa Padovana (PD) - Italy
Tel: +39 049 5352484 - Fax: +39 049 8252584 - info@gikimpianti.it - www.gikimpianti.it

AP 494 EB

PURCHASE CODES

AP 494 EB three-phase	**3RAP494EB**

SPARE PARTS

Adjustable thermo-switch	1TRM0-90
Shock isolating mounting (4 pcs)	3KIT4135
Electric junction box	1CSSDSAREL
Frame	3CNAP494EB.1
Cooling element	1RO99332
Electric fan	1VNELCO43238DV1

PERFOMANCE DIAGRAM

kr [kcal/h°C]							kW [kW/°C]
625							
575							0,7
525							0,65
475							0,6
425							0,55
375							0,5
325/0	50	100	150	200	250	300	0,45 / 0,4 / l/min

PRESSURE DROP DIAGRAM

Bar							
2							
1,75							
1,5							
1,25							
1							
0,75							
0,5							
0,25							
0	50	100	150	200	250	300	l/min

CORRECTION FACTOR

cSt	22	30	46	68	100	150	220
f	0,6	1	1,5	2,3	3,5	5	7

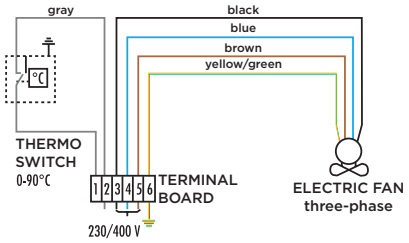

- Dimensions and technical characteristics are not binding

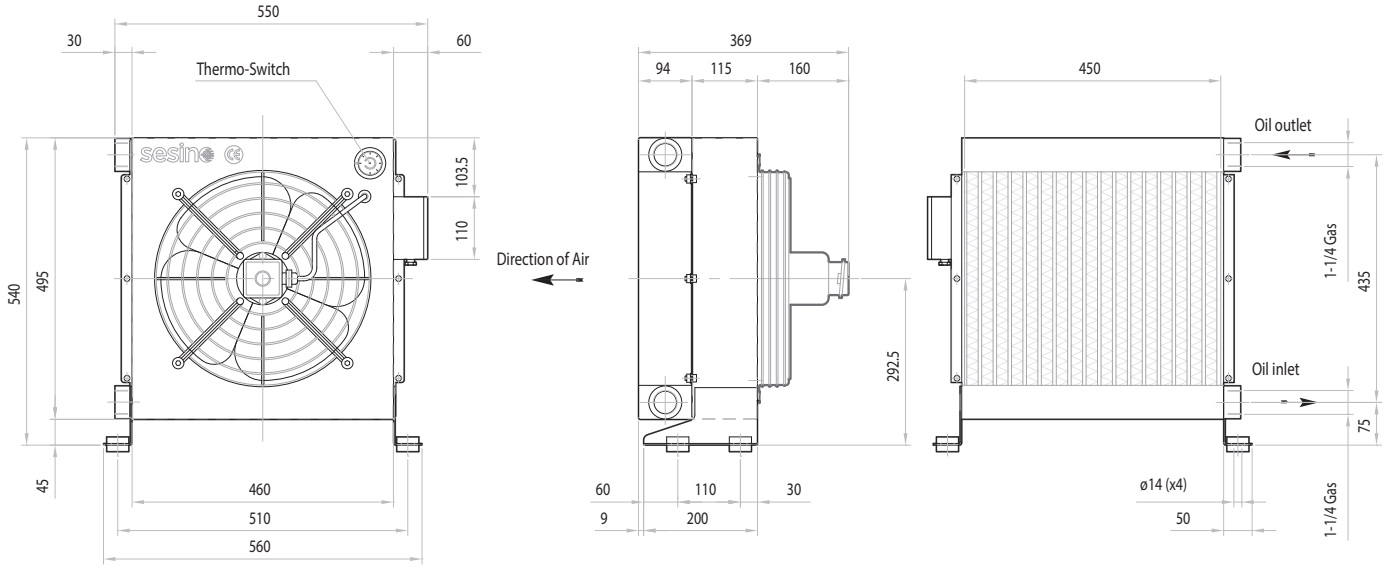

OIL FLOW	CAPACITY	VOLTAGE	FREQUENCY	POWER	CURRENT	AIR FLOW	PROTECTION	NOISE LEVEL	WEIGHT	ø FAN
l/min	l	V	hz	W	A	m³/h	IP	dB(A)	kg	mm
30-240	8	Δ 230 Y 400	50	110/180	0,57/0,33	2.750	55	72	28	400
30-240	8	Δ 265 Y 460	60	145/260	0,68/0,39	3.300	55	73	28	400

Gik Impianti Srl - Via Fossetta 12/A - 35020 - Terrassa Padovana (PD) - Italy
Tel: +39 049 5352484 - Fax: +39 049 8252584 - info@gikimpianti.it - www.gikimpianti.it

AP 430 E

PURCHASE CODES

AP 430 E three-phase	3RAP430

SPARE PARTS

Cooling element	3RNAP430E
Frame	1430CNV
Adjustable thermo-switch	1TRM0-90
Shock isolating mounting (4 pcs)	3KIT4511
Electric Fan for 3RAP430	1VNELCO43038DV
Electric junction box for 3RAP430	1CSSDSAREL

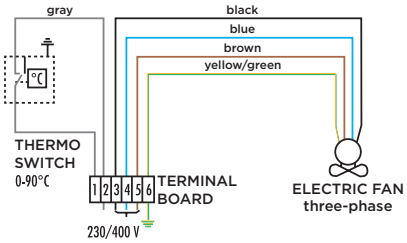

kr [kcal/h°C]	PERFOMANCE DIAGRAM	kW [kW/°C]
420		
400		0,475
380		0,45
360		0,425
340		0,4
320		0,375
300		0,35
280/0	30 60 90 120 150 180 210	l/min

Bar	PRESSURE DROP DIAGRAM
3	
2,5	
2	
1,5	
1	
0,5	
0	30 60 92 120 150 180 210 l/min

CORRECTION FACTOR							
cSt	22	30	46	68	100	150	220
f	0,6	1	1,5	2,3	3,5	5	7

- Dimensions and technical characteristics are not binding

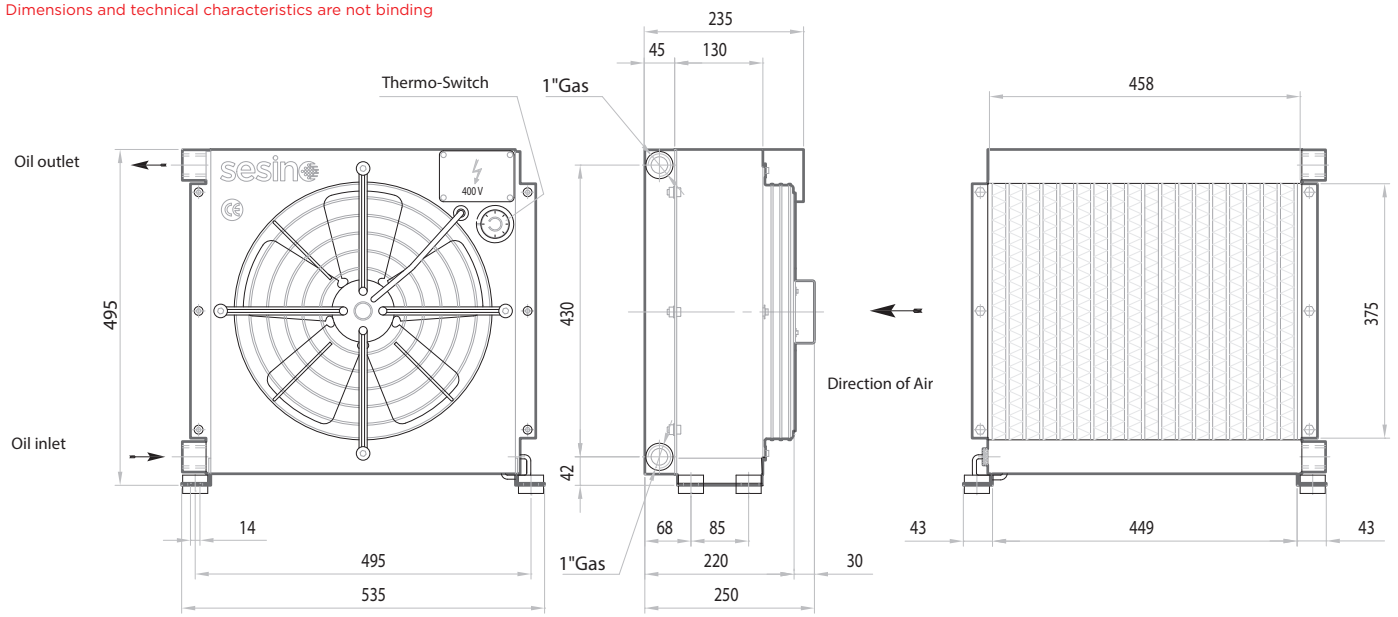

OIL FLOW	CAPACITY	VOLTAGE	FREQUENCY	POWER	CURRENT	AIR FLOW	PROTECTION	NOISE LEVEL	WEIGHT	ø FAN
l/min	l	V	hz	W	A	m³/h	IP	dB(A)	kg	mm
30-180	3,6	Δ 230 Y 400	50	110/205	0,67/0,39	2.750	55	73	18	350
30-180	3,6	Δ 265 Y 460	60	110/200	0,57/0,33	2.750	55	73	18	350

Gik Impianti Srl - Via Fossetta 12/A - 35020 - Terrassa Padovana (PD) - Italy
Tel: +39 049 5352484 - Fax: +39 049 8252584 - info@gikimpianti.it - www.gikimpianti.it

AP 300 E

PURCHASE CODES

AP 300 E single-phase	3RAP300
AP 300 E three-phase	3RAP30038

SPARE PARTS

Cooling element	3RNAP300
Frame	3CNAP300
Housing	1300TLV
Adjustable thermo-switch	1TRM0-90
Electric fan for 3RAP300	1VNA2E250G
Electric fan for 3RAP30038	1VNA2D250.2
Electric junction box for 3RAP30038	1CSSDSAREL

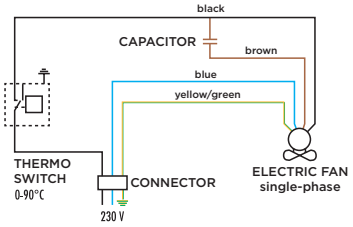

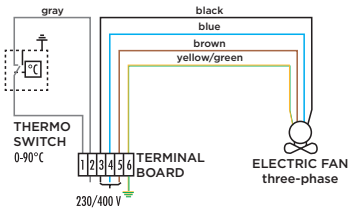

kr [kcal/h°C]	PERFOMANCE DIAGRAM	kW [kW/°C]
180		
170		0,20
160		0,19
150		0,18
140		0,17
130		0,16
120		0,15
110/0	10 20 30 40 50 60 70 80 90 l/min	0,14

Bar	PRESSURE DROP DIAGRAM
1,2	
1	
0,8	
0,6	
0,4	
0,2	
0	10 20 30 40 50 60 70 80 90 l/min

CORRECTION FACTOR							
cSt	22	30	46	68	100	150	220
f	0,6	1	1,5	2,3	3,5	5	7

- Dimensions and technical characteristics are not binding

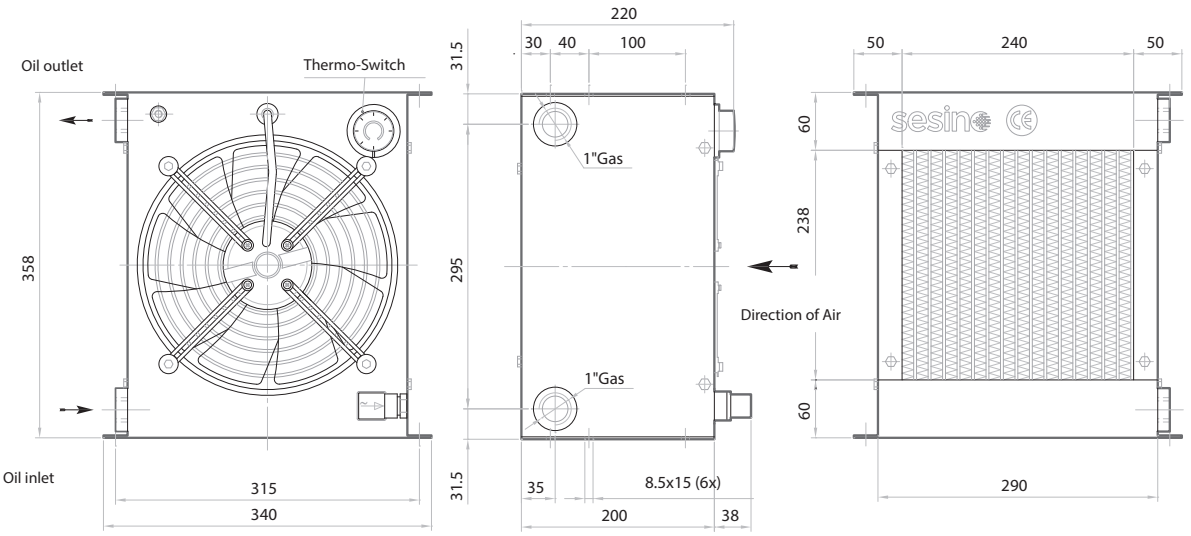

OIL FLOW	CAPACITY	VOLTAGE	FREQUENCY	POWER	CURRENT	AIR FLOW	PROTECTION	NOISE LEVEL	WEIGHT	ø FAN
l/min	l	V	hz	W	A	m³/h	IP	dB(A)	kg	mm
10-80	2	230	50/60	115/150	0,51/0,66	910	54	74	12	250
10-80	2	400	50/60	0,20/0,23	100/140	950	54	73	12	250

Gik Impianti Srl - Via Fossetta 12/A - 35020 - Terrassa Padovana (PD) - Italy
Tel: +39 049 5352484 - Fax: +39 049 8252584 - info@gikimpianti.it - www.gikimpianti.it